METHVEN

DESIGNED NEW ZEALAND & ENGINEERED

MOTU 4 TAP HOLE BATH SHOWER MIXER - GUNMETAL

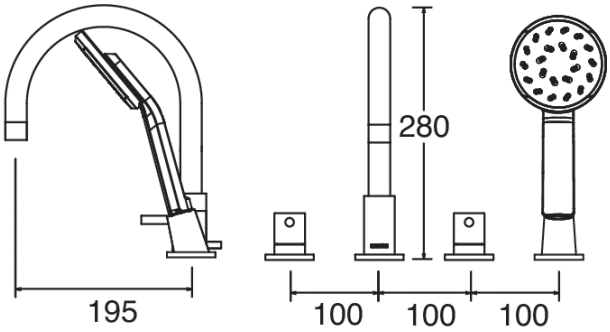

CONSTRUCTION: Brass

CARTRIDGE/VALVE TYPE: Ceramic Disc

SUPPLY: Suitable For Low Pressure Systems

INLET CONNECTIONS: ¾" BSP

WORKING PRESSURES: 0.1 - 5.0 bar

OPERATION: Separate Flow And Temperature Controls

- On Trend Gunmetal Finish For A Designer Look
- Contemporary Single Lever Design
- Complete With Kiri Satinjet Handset Regulated To 8 L/Minute
- Water Efficient Without Compromising Showering Performance
- Ceramic Disc Handles Ensure A Smooth Operation
- Products Which Are Easy To Use By All The Family

MT4BSMGM | **Gunmetal**

Open Outlet Flow (Bar - l/min)

BAR	0.1	0.3	0.5	1.0	2.0	3.0	4.0	5.0
SPOUT FLOW	7.8	12.6	17.2	24	34	41.8	47.6	52.8
HANDSET FLOW	3	6	7.3	7.6	7.9	8.3	0	0

kiwa approved KUKreg4 ATS 3
2202706

WRAS APPROVED PRODUCT
2203303

5 YEAR WARRANTY* *TERMS & CONDITIONS APPLY

Please Note: Flow rate will be dictated by installation configurations.
Please ensure to check the appropriate flow restrictor information if applicable.
***Please refer to website for full warranty details.**

FREEPHONE: 0800 195 1602 | FAX ORDERS: 08444 068 690 | EMAIL: SALES@UK.METHVEN.COM methven.com

THE INFORMATION ON THIS SPECIFICATION DOCUMENT WAS CORRECT AT THE DATE OF ISSUE. SOME VARIATION MAY OCCUR DUE TO THE MANUFACTURING TOLERENCES AND SITE SPECIFIC CONDTIONS.