METHVEN

DESIGNED NEW ZEALAND & ENGINEERED

MOTU BATH FILLER - GUNMETAL

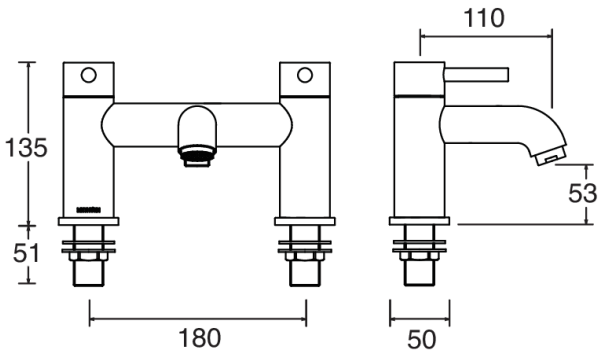

CONSTRUCTION: Brass
CARTRIDGE/VALVE TYPE: Ceramic Disc
SUPPLY: Suitable For Low Pressure Systems
INLET CONNECTIONS: ¾" BSP
WORKING PRESSURES: 0.3 - 5.0 bar
OPERATION: Separate Flow And Temperature Controls

- On Trend Gunmetal Finish For A Designer Look
- Contemporary Single Lever Design
- Ceramic Disc Handles Ensure A Smooth Operation
- Products Which Are Easy To Use By All The Family

MTBFGM	Gunmetal

Open Outlet Flow (Bar - l/min)

BAR	0.1	0.3	0.5	1.0	2.0	3.0	4.0	5.0
SPOUT FLOW	3.8	5.5	7.1	10.1	14.3	17.6	20.3	22.7

kiwa approved KUKreg4 ATS 3
2110701

WRAS APPROVED PRODUCT
2110347

5 YEAR WARRANTY* TERMS & CONDITIONS APPLY

Please Note: Flow rate will be dictated by installation configurations.
Please ensure to check the appropriate flow restrictor information if applicable.
***Please refer to website for full warranty details.**

FREEPHONE: 0800 195 1602 | FAX ORDERS: 08444 068 690 | EMAIL: SALES@UK.METHVEN.COM methven.com

THE INFORMATION ON THIS SPECIFICATION DOCUMENT WAS CORRECT AT THE DATE OF ISSUE. SOME VARIATION MAY OCCUR DUE TO THE MANUFACTURING TOLERENCES AND SITE SPECIFIC CONDTIONS.