METHVEN

DESIGNED NEW ZEALAND & ENGINEERED

TASMAN BATH SHOWER MIXER - MATTE BLACK

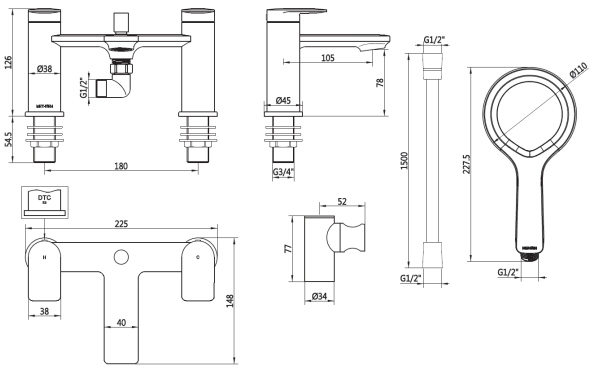

CONSTRUCTION: Brass

CARTRIDGE/VALVE TYPE: 3/4" QUARTER TURN

SUPPLY: Suitable For Low Pressure Systems

INLET CONNECTIONS: ¾" BSP

WORKING PRESSURES: 0.1 - 5.0 bar

OPERATION: Separate Flow And Temperature Controls

- On Trend Matte Black Finish For A Designer Look
- Sleek And Ergonomic Contemporary Design
- Includes Aurajet™ Aio Handset, Fitted With 6 L/Min Flow Regulator
- Water Efficient Without Compromising Showering Performance
- Ceramic Disc Handles Ensure A Smooth Operation
- Products Which Are Easy To Use By All The Family

TMBSMBK | **Matte Black**

Open Outlet Flow (Bar - l/min)

BAR	0.1	0.3	0.5	1.0	2.0	3.0	4.0	5.0
SPOUT FLOW	7.7	11.5	15.1	21.6	30.9	37.9	43.9	49
HANDSET FLOW	1.7	2.7	3.6	4.7	4.9	5.1	5.1	5.3

kiwa approved UK WATER REGULATION 4
2207711

WRAS APPROVED PRODUCT
2207366

5 YEAR WARRANTY* TERMS & CONDITIONS APPLY

Please Note: Flow rate will be dictated by installation configurations.
Please ensure to check the appropriate flow restrictor information if applicable.
***Please refer to website for full warranty details.**

FREEPHONE: 0800 195 1602 | FAX ORDERS: 08444 068 690 | EMAIL: SALES@UK.METHVEN.COM methven.com

THE INFORMATION ON THIS SPECIFICATION DOCUMENT WAS CORRECT AT THE DATE OF ISSUE. SOME VARIATION MAY OCCUR DUE TO THE MANUFACTURING TOLERENCES AND SITE SPECIFIC CONDTIONS.