METHVEN

DESIGNED NEW ZEALAND & ENGINEERED

WAI FLOOR MOUNTED BATH SHOWER MIXER - BRUSHED NICKEL

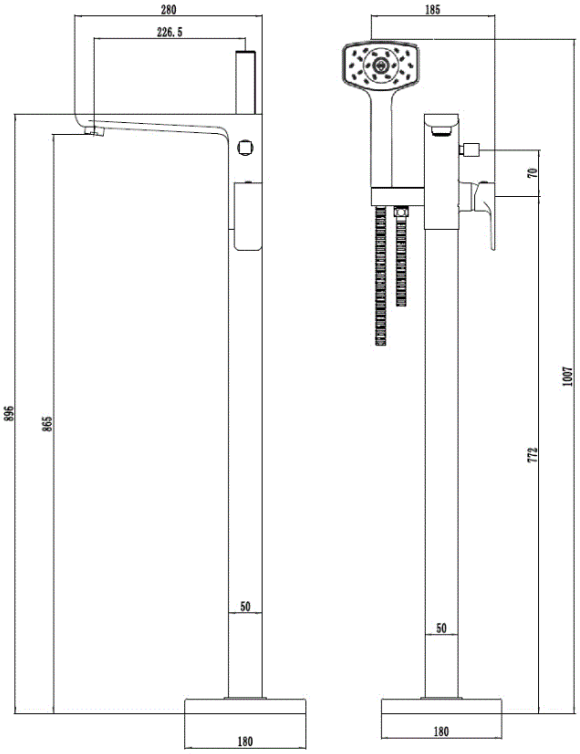

CONSTRUCTION: Brass

CARTRIDGE/VALVE TYPE: Ceramic Disc

SUPPLY: Suitable For Low Pressure Systems

INLET CONNECTIONS: ½" BSP

WORKING PRESSURES: 0.3 - 5.0 bar

OPERATION: Tilt And Turn Temperature And Flow Control

- On Trend Brushed Nickel Finish For A Designer Look
- Contemporary Square Design
- Ceramic Cartridge For Smooth Operation
- Complete With Waipori Satinjet Handset Regulated To 8 L/Minute
- Water Efficient Without Compromising Showering Performance

WAIFMBSMBN | **Brushed Nickel**

Open Outlet Flow (Bar - l/min)

BAR	0.1	0.3	0.5	1.0	2.0	3.0	4.0	5.0
SPOUT FLOW	6.8	11.6	15.6	22	31.4	38	44.2	49.6
HANDSET FLOW	2.9	5.9	7.3	7.8	7.9	8.3	0	0

kiwa approved KUKreg4 ATS 3 2010737

WRAS APPROVED PRODUCT 2111352

5 YEAR WARRANTY* *TERMS & CONDITIONS APPLY

Please Note: Flow rate will be dictated by installation configurations.
Please ensure to check the appropriate flow restrictor information if applicable.
***Please refer to website for full warranty details.**

FREEPHONE: 0800 195 1602 | FAX ORDERS: 08444 068 690 | EMAIL: SALES@UK.METHVEN.COM methven.com

THE INFORMATION ON THIS SPECIFICATION DOCUMENT WAS CORRECT AT THE DATE OF ISSUE. SOME VARIATION MAY OCCUR DUE TO THE MANUFACTURING TOLERENCES AND SITE SPECIFIC CONDTIONS.